Preprints.org

Article

Not peer-reviewed version

Study of the Efficiency of Photovoltaic Modules of Monocrystalline (Mono-Si), Polycrystalline Silicon (Poly-Si) and Cadmium Telluride (CdTe) Thin-Film Modules After 15 Years of Operation in the Conditions of Southeastern Europe, Bulgaria

Boris Kenarov * , Mihail Pchelinski , Miglena Nikolaeva-Dimitrova

Posted Date: 28 January 2026

doi: 10.20944/preprints202601.2203.v1

Keywords: photovoltaic modules; degradation; monocrystalline silicon; mono-Si; polycrystalline silicon; poly-Si; CdTe; Sliven; long-term analysis

Preprints.org is a free multidisciplinary platform providing preprint service that is dedicated to making early versions of research outputs permanently available and citable. Preprints posted at Preprints.org appear in Web of Science, Crossref, Google Scholar, Scilit, Europe PMC.

Copyright: This open access article is published under a Creative Commons CC BY 4.0 license, which permit the free download, distribution, and reuse, provided that the author and preprint are cited in any reuse.

Preprints.org (www.preprints.org) | NOT PEER-REVIEWED | Posted: 28 January 2026 doi:10.20944/preprints202601.2203.v1

Disclaimer/Publisher's Note: The statements, opinions, and data contained in all publications are solely those of the individual author(s) and contributor(s) and not of MDPI and/or the editor(s). MDPI and/or the editor(s) disclaim responsibility for any injury to people or property resulting from any ideas, methods, instructions, or products referred to in the content.

Article

Study of the Efficiency of Photovoltaic Modules of Monocrystalline (Mono-Si), Polycrystalline Silicon (Poly-Si) and Cadmium Telluride (CdTe) Thin-Film Modules after 15 Years of Operation in the Conditions of Southeastern Europe, Bulgaria

Boris Kenarov [1,*], Mihail Pchelinski [2,3] and Miglena Nikolaeva-Dimitrova [2,3]

[1] Trakia University – Stara Zagora, Faculty of Engineering and Technology, 38 Graf Ignatiev Street, Yambol 8600, Bulgaria

[2] Central Laboratory for Solar Energy and New Energy Sources (CL SENES) – Bulgarian Academy of Sciences, "Tzarigradsko Chaussee" 72, Sofia, Bulgaria

[3] Centre of Competence HITMOBIL, Acad. G. Bonchev Str., bl.10, Sofia 1113, Bulgaria

* Correspondence: Correspondence: boris.kenarov@trakia-uni.bg

Abstract

The long-term degradation of photovoltaic (PV) modules under real operating conditions remains a critical factor for accurately assessing lifetime energy yield and economic performance. In this study, the field performance of thin-film cadmium telluride (CdTe), polycrystalline silicon (poly-Si), and monocrystalline silicon (mono-Si) photovoltaic modules was evaluated after 15 years of continuous outdoor operation in a temperate continental climate in Southeastern Europe (Sliven region, Bulgaria). All modules were installed at the same site and operated under identical mounting and environmental conditions, enabling a direct comparison between technologies. The results after electrical characterization reveal a total efficiency reduction of 12.3% for CdTe modules, corresponding to an average degradation rate of approximately 0.82% per year. In contrast, polycrystalline silicon modules exhibit a significantly lower efficiency loss of 1.2% (≈0.08% per year), while monocrystalline silicon modules show the lowest degradation, with only a 0.4% decrease over the 15-year period (≈0.03% per year). Visual inspection identified localized degradation features, including surface alterations and defects, which serve as qualitative indicators of long-term material aging. The findings indicate that crystalline silicon technologies demonstrate substantially higher long-term stability than thin-film CdTe modules under moderate continental climatic conditions. The presented long-term field data contribute to improved understanding of climate-specific degradation behavior and support more accurate lifetime performance modeling for photovoltaic systems in similar environments.

Keywords: photovoltaic modules; degradation; monocrystalline silicon; mono-Si; polycrystalline silicon; poly-Si; CdTe; Sliven; long-term analysis

1. Introduction

The long-term reliability of photovoltaic (PV) modules is a key factor for the technical and economic performance of solar power systems. While manufacturers typically guarantee operational lifetimes of 25–30 years, the actual energy yield over this period strongly depends on the degradation rate of the modules under real operating conditions. Degradation processes are influenced by a combination of environmental stressors, including temperature cycling, ultraviolet (UV) radiation, humidity, and mechanical loads, which vary significantly across different climatic regions.

© 2025 by the author(s). Distributed under a Creative Commons CC BY license.

Preprints.org (www.preprints.org) | NOT PEER-REVIEWED | Posted: 28 January 2026 doi:10.20944/preprints202601.2203.v1

Numerous studies have investigated PV module degradation using accelerated aging tests or short- to medium-term field data, often limited to periods of 3–5 years [1]. Reported average degradation rates typically range between 0.6 and 1.1% per year, depending on technology and climate [2–4]. However, long-term field studies exceeding a decade remain relatively scarce, particularly those providing direct comparisons between different PV technologies operating under identical environmental conditions. This limitation introduces uncertainty in lifetime performance assessments, levelized cost of electricity (LCOE) calculations, and investment risk analyses.

Existing long-term field studies are predominantly focused on extreme climates, such as arid, tropical, or high-altitude regions, while data from moderate continental climates remain underrepresented in the literature [5,6]. Southeastern Europe, and Bulgaria in particular, exhibits a temperate continental climate characterized by hot summers, cold winters, pronounced seasonal temperature variations, and moderate humidity levels. These conditions differ substantially from those typically investigated and may lead to distinct degradation behaviors that are not adequately captured by global averages.

Figure 1. Sliven region in Bulgaria [7].

In this context, the present study provides a 15-year field performance analysis of three widely used photovoltaic technologies: thin-film cadmium telluride (CdTe), polycrystalline silicon (poly-Si), and monocrystalline silicon (mono-Si) modules. All modules were installed at the same site in the Sliven region of Bulgaria and operated under identical environmental and mounting conditions. This configuration enables a direct, technology-to-technology comparison while minimizing site-specific biases.

The primary objective of this work is to quantify and compare the long-term degradation rates of these PV technologies based on laboratory measurements performed under standard test conditions after 15 years of continuous outdoor operation. In addition, visual inspections were conducted to document observable degradation features and relate them to the measured electrical performance. By providing long-term empirical data from a continental European climate, this study aims to contribute to a more accurate understanding of PV module reliability, support improved lifetime performance modeling, and reduce uncertainty in techno-economic assessments for similar regions.

2. Experimental Section (Materials and Methods)

2.1. Site Description and Experimental Setup

The photovoltaic modules investigated in this study were installed at a ground-mounted photovoltaic power plant located in the Sliven region, Bulgaria. The site is characterized by a

© 2025 by the author(s). Distributed under a Creative Commons CC BY license.

Preprints.org (www.preprints.org) | NOT PEER-REVIEWED | Posted: 28 January 2026 doi:10.20944/preprints202601.2203.v1

temperate continental climate with pronounced seasonal variations in temperature and solar irradiance.

Table 1. Climate table / weather by months Sliven region average for the period 1991 - 2021 [8].

1991 - 2021	Jan.	Feb.	Mar.	Apr.	May	June	July	Aug.	Sept.	Oct.	Nov.	Dec.
Average temperature °C	0.2	2	5.7	10.5	15.4	19.5	21.9	22	17.4	11.9	7.2	2
Minimum temperature °C	-3.1	-1.8	1.2	5.4	10.2	14.4	16.7	16.7	12.8	8	3.9	-1.1
Maximum temperature °C	3.9	6	10.4	15.4	20.3	24.1	26.7	27.1	22.2	16.2	11	5.4
Precipitation / Rain mm	57	57	69	81	112	102	93	60	62	64	62	68
Humidity(%)	79%	76%	72%	69%	70%	68%	63%	61%	66%	74%	79%	79%
Rainy days (days)	6	6	8	9	11	10	9	6	6	6	6	7
Average sunshine hours (hours)	4.5	5	6.6	8.8	10.1	11	11.3	10.9	8.4	6	4.8	4.6

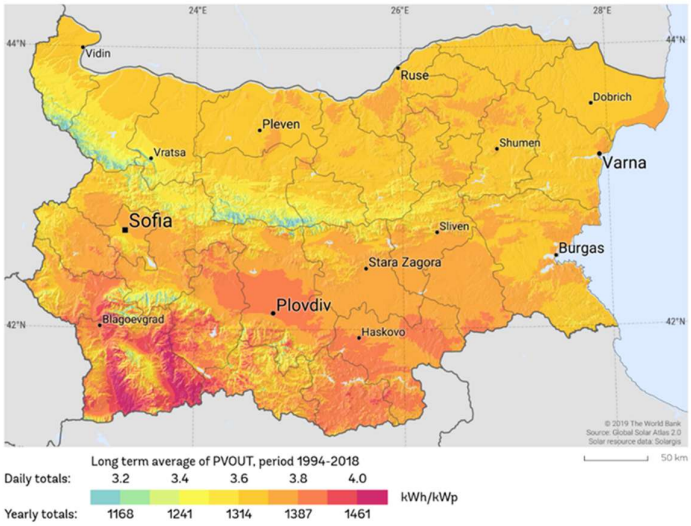

Figure 2. Photovoltaic power potential map Bulgaria [9].

All modules were mounted on aluminum ground structures with a fixed south-facing orientation and a tilt angle of 30° relative to the horizontal plane (Figures 3 and 4). This configuration was selected to ensure uniform exposure to solar radiation and to minimize geometric and shading-related effects.

© 2025 by the author(s). Distributed under a Creative Commons CC BY license.

Preprints.org (www.preprints.org) | NOT PEER-REVIEWED | Posted: 28 January 2026 doi:10.20944/preprints202601.2203.v1

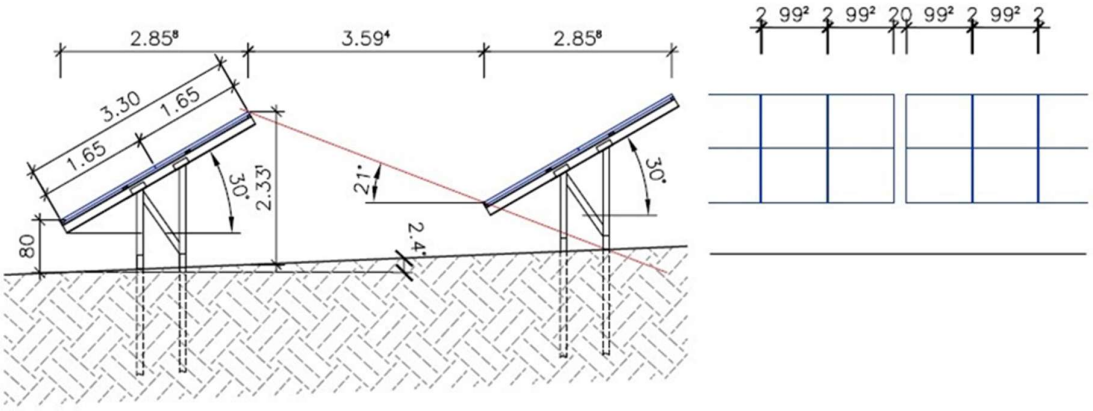

Figure 3. Schematic of the structure on which polycrystalline and monocrystalline silicon modules are mounted.

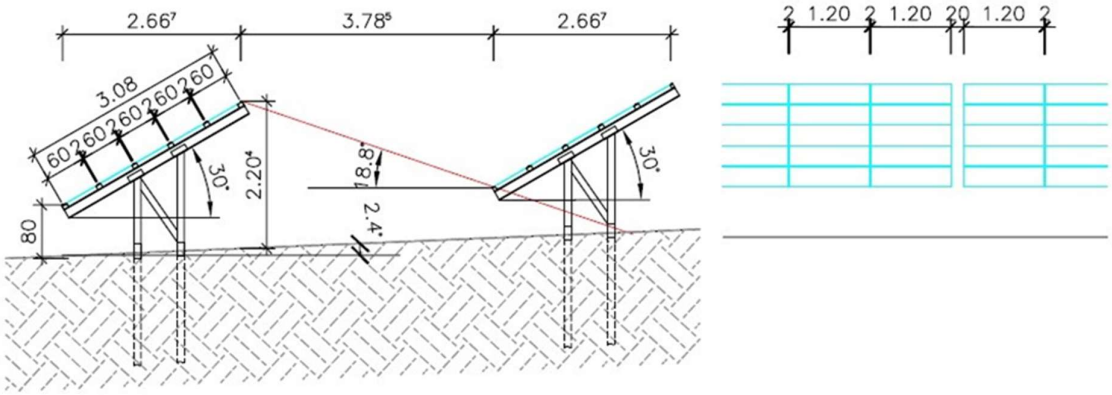

Figure 4. Schematic of the structure on which CdTe thin-film modules are mounted.

Current–voltage (I–V) characteristics of all modules were measured in Laboratory 2 "Photovoltaic Modules and Generators" at the Central Laboratory for Solar Energy and New Energy Sources (CL SENES), Bulgarian Academy of Sciences and Centre of Competence HITMOBIL in accordance with IEC 60904-9 (Edition 3). All measurements were performed using an ETERNALSUN solar simulator class A+A+A+ under standard test conditions (STC): irradiance of 1000 W/m², covering a spectral range from ≤300 nm to ≥2000 nm, air mass AM 1.5, and module temperature of 25 °C. The measured electrical parameters included maximum power output (Pmax), voltage and current at the maximum power point (Vmpp, Impp), open-circuit voltage (Voc), short-circuit current (Isc), and module efficiency (η). The degradation assessment was conducted by comparing the measured values after 15 years of operation with the initial manufacturer specifications.

The study is based on operational data collected over a 15-year period from real photovoltaic installations operating continuously under outdoor conditions in the Sliven region. Modules manufactured using three different technologies—thin-film CdTe, polycrystalline silicon, and monocrystalline silicon—were selected for analysis. All modules operated under identical environmental and mounting conditions, allowing a direct comparison of long-term performance degradation between technologies.

2.2. Laboratory Measurements

Laboratory measurements included the determination of output power, current, voltage, and conversion efficiency of the photovoltaic modules, along with external parameters such as irradiance

© 2025 by the author(s). Distributed under a Creative Commons CC BY license.

Preprints.org (www.preprints.org) | NOT PEER-REVIEWED | Posted: 28 January 2026 doi:10.20944/preprints202601.2203.v1

and ambient temperature. A comparative analysis approach was applied, whereby the measured efficiencies were evaluated against the manufacturer's initial rated values.

The percentage efficiency reduction over time was calculated to quantify the degradation over the 15-year operational period. Module efficiency was calculated using Equation (1), while degradation was determined using Equation (2).

Equation (1): Module efficiency calculation

$$\eta = \frac{P_{MPP}}{G \text{ x } A} \text{x } 100\%$$

where:

η is the module efficiency,

P_{MPP} is the maximum output power [Wp],

G is the incident solar irradiance [W/m²],

A is the module area [m²].

Equation (2): Module degradation calculation

$$D = \frac{P_0 - P_{15}}{P_0} \text{ x } 100\%$$

where:

D is the percentage degradation,

P_0 is the initial value,

P_{15} is the value after 15 years of operation.

2.3. Visual Inspection

A visual inspection was performed to identify observable defects resulting from long-term outdoor operation. The following degradation features were documented:

- Hot spots observed on the photovoltaic cells of both polycrystalline and monocrystalline silicon modules (Figure 5). A hot spot is a localized region of elevated temperature within a PV module that can damage the cell or associated components. Hot spots may arise due to partial shading, cell mismatch, or interconnection defects [10,11].
- Cracks in photovoltaic cells of polycrystalline and monocrystalline silicon modules (Figure 6). Microcracks consist of fine fractures within the silicon cells that are typically not visible to the naked eye but may extend through the cell thickness. These defects can lead to loss of electrical continuity and create additional recombination pathways for charge carriers [11].
- Oxidized surfaces in thin-film CdTe modules. Figure 7 illustrates a localized visual defect in the junction box region of a CdTe module, manifested as light-colored streaks with altered optical density. The defect follows the geometry of the thin-film structure and is likely associated with localized surface degradation of functional layers.

© 2025 by the author(s). Distributed under a Creative Commons CC BY license.

Preprints.org (www.preprints.org) | NOT PEER-REVIEWED | Posted: 28 January 2026 doi:10.20944/preprints202601.2203.v1

Figure 5. Hot spot of a monocrystalline silicon cell.

Figure 6. Crack in a monocrystalline silicon cell.

© 2025 by the author(s). Distributed under a Creative Commons CC BY license.

Preprints.org (www.preprints.org) | NOT PEER-REVIEWED | Posted: 28 January 2026 doi:10.20944/preprints202601.2203.v1

Figure 7. Oxidized surface of a CdTe thin-film module.

3. Results

3.1. Thin-Film Cdte Modules

Thin-film cadmium telluride (CdTe) photovoltaic modules represent a second-generation PV technology characterized by a significantly thinner active layer compared to crystalline silicon cells. In CdTe modules, the photovoltaic material is deposited onto a glass substrate in a layer only a few micrometers thick. This structure enables reduced material consumption and lower manufacturing costs while maintaining relatively good efficiency, particularly under diffuse irradiance and high-temperature conditions.

CdTe modules typically exhibit a lower temperature coefficient of power compared to silicon-based modules, allowing better performance retention in hot climates. A key drawback of the technology is the use of cadmium, a toxic element that requires stringent safety measures during manufacturing and recycling. Despite this, CdTe modules are widely regarded as one of the most cost-effective and mature thin-film photovoltaic technologies.

Table 2 summarizes the test results for three randomly selected CdTe modules. Comparison of the averaged measured values with the manufacturer's specifications indicates a total efficiency reduction of 12.3% over the 15-year operational period.

Table 2. Results of thin-film module tests.

Value	Unit of measure	Factorial	Test module 1	Test module 2	Test module 3	Avg. value
Max. output power Pmax	[W]	75	59.89	64.04	63.30	62.41
Voltage at maximum power point Vmpp	[V]	68.20	62.72	63.66	62.50	62.96
Current at maximum power point Impp	[A]	1.10	0.95	1.01	1.01	0.99
Open circuit voltage Voc	[V]	89.60	85.99	87.40	85.67	86.35
Short circuit current Isc	[A]	1.23	1.16	1.17	1.17	1.17
Module efficiency	%	10.4	8.75	9.36	9.25	9.12
Irradiance 1.5 AM	W/m²	1000	1000	1000	1000	1000
Ambient temperature	°C	25	25	25	25	25

© 2025 by the author(s). Distributed under a Creative Commons CC BY license.

Preprints.org (www.preprints.org) | NOT PEER-REVIEWED | Posted: 28 January 2026 doi:10.20944/preprints202601.2203.v1

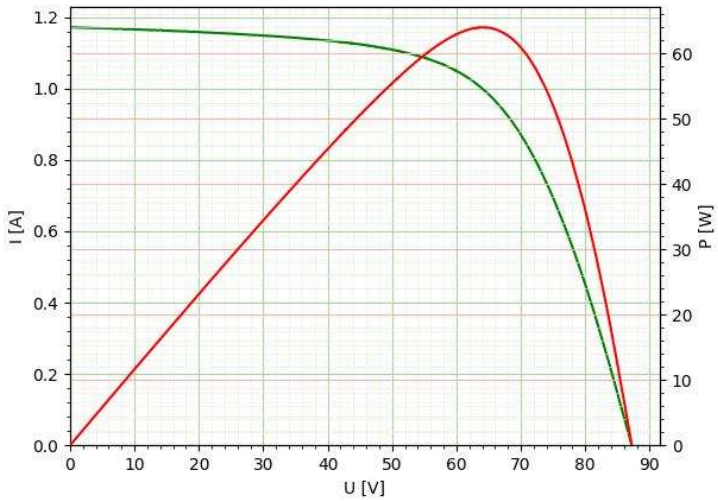

Figure 8. I-V characteristics (green) and power (red) of thin-film CdTe modules.

3.2. Polycrystalline Silicon Modules

Polycrystalline (multicrystalline) silicon is composed of multiple silicon crystals fused together, resulting in visible grain boundaries within the material.

Advantages:

- Lower manufacturing cost;
- Reduced energy consumption during production;
- Suitable for large-scale installations where cost considerations outweigh maximum efficiency.

Disadvantages:

- Slightly lower efficiency (typically 15–18%);
- Higher optical and electrical losses compared to monocrystalline silicon.

Table 3 presents the test results for three randomly selected polycrystalline silicon modules. The comparison between measured average values and manufacturer data shows an efficiency reduction of only 1.2% after 15 years of operation, indicating excellent long-term stability under the investigated climatic conditions.

Table 3. Test results of polycrystalline modules.

Value	Unit of measure	Factorial	Test module 1	Test module 2	Test module 3	Avg. value
Max. output power Pmax	[W]	240	235.27	237.44	236.51	236.41
Voltage at maximum power point Vmpp	[V]	29.7	29.39	29.60	29.55	29.51
Current at maximum power point Impp	[A]	8.17	8.01	8.02	8	8.01
Open circuit voltage Voc	[V]	36.8	36.65	36.74	36.74	36.71
Short circuit current Isc	[A]	8.75	8.57	8.57	8.55	8.56
Module efficiency	%	14.5	14.26	14.39	14.33	14.33
Irradiance 1.5 AM	W/m²	1000	1000	1000	1000	1000
Ambient temperature	°C	25	25	25	25	25

© 2025 by the author(s). Distributed under a Creative Commons CC BY license.

Preprints.org (www.preprints.org) | NOT PEER-REVIEWED | Posted: 28 January 2026 doi:10.20944/preprints202601.2203.v1

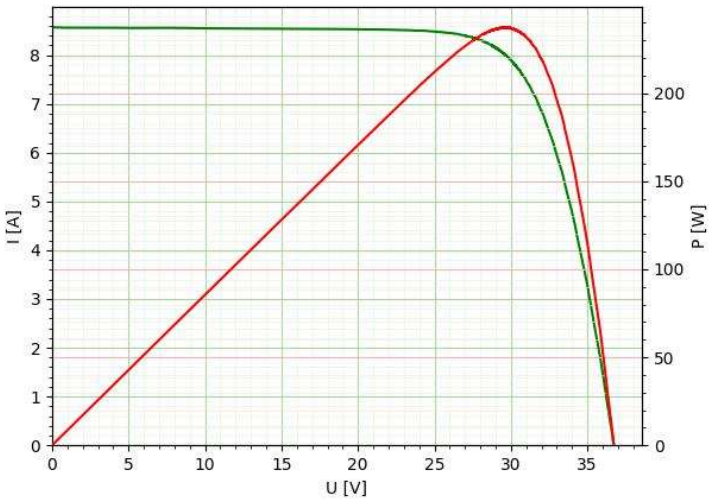

Figure 9. I-V characteristics (green) and power (red) of polycrystalline poly-Si modules.

3.3. Monocrystalline Silicon Modules

Monocrystalline silicon is composed of a single, continuous crystal with a uniform lattice structure and no grain boundaries. This structural homogeneity enables superior charge carrier mobility and reduced recombination losses.

Advantages:

- Higher efficiency (typically 18–22%);
- Higher power density per unit area;
- Better performance under low-irradiance conditions;
- Longer operational lifetime (25–35 years).

Disadvantages:

- Higher production cost and energy-intensive manufacturing;
- Greater material waste during crystal slicing.

Table 4 summarizes the results for six randomly selected monocrystalline silicon modules. The comparison with manufacturer specifications indicates an exceptionally low efficiency reduction of only 0.4% over the 15-year operational period.

Table 4. Test results of monocrystalline modules.

Value	Unit of measure	Factorial	Test module 1	Test module 2	Test module 3	Test module 4	Test module 5	Test module 6	Avg. value
Max. output power Pmax	[W]	240,00	240.5	238.36	238.39	240.78	238.48	241.31	239.64
Voltage at maximum power point Vmpp	[V]	30.8	30.04	29.92	29.92	30.14	29.95	30.14	30.02
Current at maximum power point Impp	[A]	7.8	8.01	7.97	7.97	7.99	7.96	8.01	7.98
Open circuit voltage Voc	[V]	37.6	37.51	37.32	37.42	37.58	37.42	37.56	37.46
Short circuit current Isc	[A]	8.40	8.48	8.51	8.52	8.51	8.47	8.53	8.5

© 2025 by the author(s). Distributed under a Creative Commons CC BY license.

Preprints.org (www.preprints.org) | NOT PEER-REVIEWED | Posted: 28 January 2026 doi:10.20944/preprints202601.2203.v1

Module efficiency	**%**	**14.7**	**14.69**	**14.56**	**14.56**	**14.71**	**14.57**	**14.74**	**14.64**
Irradiance 1.5 AM	**W/m²**	**1000**	**1000**	**1000**	**1000**	**1000**	**1000**	**1000**	**1000**
Ambient temperature	**°C**	**25**	**25**	**25**	**25**	**25**	**25**	**25**	**25**

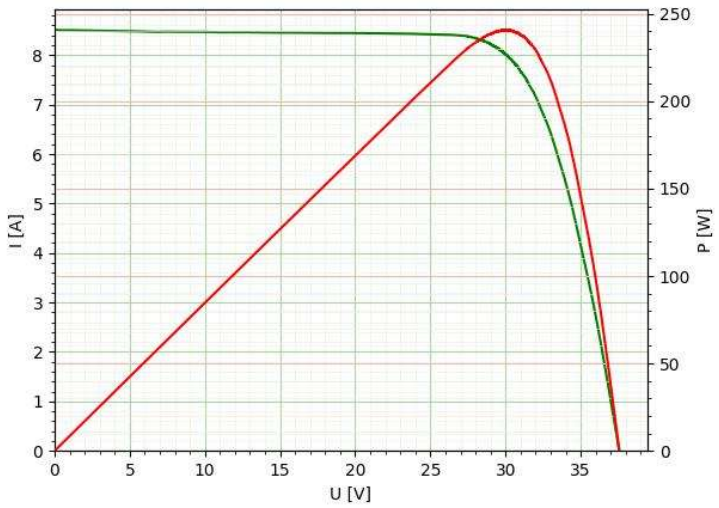

Figure 10. I-V characteristics (green) and power (red) of monocrystalline mono-Si modules.

4. Discussion

The 15-year field performance analysis of CdTe, polycrystalline silicon, and monocrystalline silicon photovoltaic modules installed in the Sliven region reveals distinct degradation behaviors associated with both technology type and local climatic conditions. Since all modules were operated at the same site and under identical mounting configurations, the observed differences can be primarily attributed to intrinsic material properties and their interaction with the environment.

The thin-film CdTe modules exhibit the highest reduction in efficiency, amounting to 12.3% over the 15-year period, corresponding to an average degradation rate of approximately 0.82% per year. This value lies within the upper range of degradation rates reported in the literature for CdTe technologies and is consistent with previous field studies conducted under conditions involving pronounced temperature cycling and long-term environmental exposure. The continental climate of the Sliven region, characterized by hot summers, cold winters, and substantial seasonal temperature variations, may impose additional thermo-mechanical stress on thin-film structures. Furthermore, the visually observed localized surface alterations near the junction box area suggest possible moisture- and oxygen-related degradation processes, although no direct causal relationship can be established based solely on visual inspection.

In contrast, the polycrystalline silicon modules demonstrate a markedly lower efficiency loss of 1.2% over 15 years, corresponding to an average degradation rate of approximately 0.08% per year. This value is significantly lower than commonly cited global averages and indicates a high level of long-term stability under the investigated climatic conditions. The presence of grain boundaries in polycrystalline silicon, often considered a potential weakness, does not appear to lead to accelerated degradation in this case. Instead, the results suggest that polycrystalline modules may exhibit robust resistance to long-term environmental stress in moderate continental climates.

The monocrystalline silicon modules show the lowest degradation among the three technologies, with a total efficiency decrease of only 0.4% over 15 years (≈0.027% per year). This exceptionally low degradation rate confirms the strong long-term reliability of monocrystalline

© 2025 by the author(s). Distributed under a Creative Commons CC BY license.

Preprints.org (www.preprints.org) | NOT PEER-REVIEWED | Posted: 28 January 2026 doi:10.20944/preprints202601.2203.v1

silicon technology and is consistent with its homogeneous crystal structure, which minimizes defect-related recombination pathways and mechanical stress accumulation. The results indicate that, under moderate climatic conditions without extreme environmental stressors, monocrystalline silicon modules can maintain near-nominal performance well beyond the commonly assumed degradation benchmarks.

A comparison across the three technologies highlights the critical role of material structure and encapsulation robustness in determining long-term field performance. While CdTe modules offer advantages such as lower temperature coefficients and reduced manufacturing costs, their higher degradation rate under continental climatic conditions may limit their long-term energy yield relative to crystalline silicon technologies. Conversely, both mono- and polycrystalline silicon modules demonstrate degradation rates substantially below widely reported global averages, suggesting that moderate continental climates may be particularly favorable for long-term crystalline silicon PV operation.

It should be noted that this study is subject to certain limitations. The number of tested modules is limited, and the analysis is confined to a single geographic location. In addition, the investigation relies primarily on electrical characterization and visual inspection, without complementary techniques such as electroluminescence or infrared thermography. Nevertheless, the long observation period and controlled comparative setup provide valuable empirical insight into long-term PV module behavior under real operating conditions.

Overall, the findings underscore the importance of climate-specific, long-term field data for improving degradation models, refining lifetime energy yield predictions, and supporting informed technology selection for photovoltaic installations in regions with similar environmental characteristics.

5. Conclusions

Monocrystalline silicon modules exhibit the highest long-term stability, demonstrating minimal performance degradation of approximately 0.027% per year. Owing to their superior durability and sustained efficiency, they are particularly suitable for photovoltaic installations targeting long operational lifetimes and high energy yield.

Polycrystalline silicon modules offer a favorable balance between cost and durability, with a low degradation rate of approximately 0.08% per year. These characteristics make them a reliable and economically viable option under the typical climatic conditions of Bulgaria.

In contrast, thin-film CdTe modules show a substantially higher degradation rate, reaching approximately 0.82% per year. This significantly limits their applicability in regions characterized by pronounced temperature variations and elevated ultraviolet exposure, such as the Sliven region.

Overall, silicon-based technologies, both monocrystalline and polycrystalline, demonstrate markedly better long-term stability compared to thin-film alternatives. This makes them the preferred choice for long-term photovoltaic projects in continental and moderate continental climates.

The results after electrical characterization reveal a total efficiency reduction of 12.3% for CdTe modules, corresponding to an average degradation rate of approximately 0.82% per year. In contrast, polycrystalline silicon modules exhibit a significantly lower efficiency loss of 1.2% (≈0.08% per year), while monocrystalline silicon modules show the lowest degradation, with only a 0.4% decrease over the 15-year period (≈0.03% per year). Visual inspection identified localized degradation features, including surface alterations and defects, which serve as qualitative indicators of long-term material

The availability of 15 years of real-field operational data represents a valuable asset for optimizing investment decisions, improving performance forecasting, planning maintenance strategies, and accurately assessing the levelized cost of electricity (LCOE) for photovoltaic systems in Bulgaria.

The results of this study can be effectively utilized for the development of region-specific degradation models, formulation of recommendations for investors and system designers, and improvement of technical standards and policy frameworks within the renewable energy sector.

© 2025 by the author(s). Distributed under a Creative Commons CC BY license.

Preprints.org (www.preprints.org) | NOT PEER-REVIEWED | Posted: 28 January 2026 doi:10.20944/preprints202601.2203.v1

This work represents one of the first long-term field studies investigating photovoltaic module degradation under the climatic conditions of the Sliven region. The absence of comparable prior studies for this area enhances the significance of the findings, as they reflect the actual long-term behavior of different photovoltaic technologies in a climate representative of much of Bulgaria. Consequently, the presented dataset can serve as a reference basis for future research, modeling efforts, and comparative analyses across Bulgaria and Southeastern Europe.

The observed degradation rates of silicon-based photovoltaic modules are notably lower than the average values commonly reported in international literature. This can be attributed to the moderate regional climate, characterized by the absence of extreme temperatures, relatively limited thermal stress, moderate humidity levels, and a lack of aggressive environmental factors such as sandstorms, saline aerosols, or prolonged extreme heat. These conditions create a favorable environment for long-term photovoltaic operation and contribute to slower material aging.

The low degradation rates measured in this region indicate that photovoltaic systems installed under Bulgaria's moderate climatic conditions can exceed their nominal design lifetime of 25 years while maintaining high efficiency and reliability. This has a direct positive impact on long-term energy yield, reduction of LCOE, and overall economic performance of photovoltaic projects.

In this context, the findings of the present study support the conclusion that climate is a key determinant of long-term photovoltaic module degradation. Moderate continental regions such as the Sliven area provide optimal conditions for the deployment of sustainable, durable, and economically efficient photovoltaic installations.

Acknowledgments: The authors kindly acknowledge the financial support of projects:; № BG16RFPR002-1.014-0009 "Development and sustainability of Centre of Competence HITMOBIL" funded by Programme "Research, Innovations and Digitalization for Smart Transformation" 2021-2027, co-funded by the EU from European Regional Development Fund; № BG-RRP-2.004-0006 "Development of scientific research and innovation at Trakia University in the service of health and sustainable well-being".

References

1. Cantürk, Z. Long-term Performance and degradation rates of PV modules in Central Anatolia. Master Thesis, Middle East Technical University, 2021.;
2. Jordan, D.C.; Kurtz, S.R. Photovoltaic Degradation Rates—an Analytical Review. Prog. Photovolt. Res. Appl. 2013, 21, 12–29, doi:10.1002/pip.1182.;
3. Straub-Mück, M.; Geyer-Klingeberg, J.; Rathgeber, A.W. Determinants of the Long-Term Degradation Rate of Photovoltaic Modules: A Meta-Analysis. Renew. Sustain. Energy Rev. 2025, 216, 115697, doi:10.1016/j.rser.2025.115697.;
4. Rahman, T.; Mansur, A.; Hossain Lipu, M.; Rahman, Md.; Ashique, R.; Houran, M.; Elavarasan, R.; Hossain, E. Investigation of Degradation of Solar Photovoltaics: A Review of Aging Factors, Impacts, and Future Directions toward Sustainable Energy Management. Energies 2023, 16, 3706, doi:10.3390/en16093706.;
5. Rajput, P.; Singh, D.; Singh, K.Y.; Karthick, A.; Shah, M.A.; Meena, R.S.; Zahra, M.M.A. A Comprehensive Review on Reliability and Degradation of PV Modules Based on Failure Modes and Effect Analysis. Int. J. Low-Carbon Technol. 2024, 19, 922–937, doi:10.1093/ijlct/ctad106.;
6. Özkalay, E.; Quest, H.; Gassner, A.; Virtuani, A.; Eder, G.C.; Vorstoffel, S.; Buerhop-Lutz, C.; Friesen, G.; Ballif, C.; Burri, M.; et al. Three Decades, Three Climates: Environmental and Material Impacts on the Long-Term Reliability of Photovoltaic Modules. EES Sol. 2025, 1, 580–599, doi:10.1039/D4EL00040D.;
7. Bulgaria, d-Maps.Com: Free Map, Free Blank Map, Free Outline Map, Free Base Map, Boundaries, Regions, Names, White Available online: https://d-maps.com/carte.php?num_car=5669&lang=en (accessed on 20 January 2026).;
8. Климатът в Sliven: Времето в Sliven и Температурите По Месеци Available online: https://bg.climate-data.org/%D0%B5%D0%B2%D1%80%D0%BE%D0%BF%D0%B0/%D0%B1%D1%8A%D0%BB%D0%B3%D0%B0%D1%80%D0%B8%D1%8F/sliven/sliven-695/ (accessed on 20 January 2026).;

© 2025 by the author(s). Distributed under a Creative Commons CC BY license.

Preprints.org (www.preprints.org) | NOT PEER-REVIEWED | Posted: 28 January 2026 doi:10.20944/preprints202601.2203.v1

9. Solar Resource Maps & GIS Data for 200+ Countries | Solargis Available online: https://solargis.com/resources/free-maps-and-gis-data?locality=bulgaria (accessed on 20 January 2026).;
10. Molenbroek, E.; Waddington, D.W.; Emery, K.A. Hot Spot Susceptibility and Testing of PV Modules. In Proceedings of the The Conference Record of the Twenty-Second IEEE Photovoltaic Specialists Conference - 1991; IEEE: Las Vegas, NV, USA, 1991; pp. 547–552.;
11. Munoz, M.A.; Alonso-García, M.C.; Vela, N.; Chenlo, F. Early Degradation of Silicon PV Modules and Guaranty Conditions. Sol. Energy 2011, 85, 2264–2274, doi:10.1016/j.solener.2011.06.011.;
12. Ihaddadene, R.; Tabet, S.; Guerira, B.; Ihaddadene, N.; Bekhouche, Kh. Evaluation of the Degradation of a PV Panel in an Arid Zone; Case Study Biskra (Algeria). Sol. Energy 2023, 263, 111809, doi:10.1016/j.solener.2023.111809.;
13. Köntges, M.; Kurtz, S.; Packard, C.; Jahn, U.; Berger, K.A.; Kato, K. Performance and Reliability of Photovoltaic Systems: Subtask 3.2: Review of Failures of Photovoltaic Modules: IEA PVPS Task 13: External Final Report IEA-PVPS; International Energy Agency, Photovoltaic Power Systems Programme: Sankt Ursen, 2014; ISBN 978-3-906042-16-9.;
14. Dhoke, A.; Sharma, R.; Saha, T.K. PV Module Degradation Analysis and Impact on Settings of Overcurrent Protection Devices. Sol. Energy 2018, 160, 360–367, doi:10.1016/j.solener.2017.12.013.

Disclaimer/Publisher's Note: The statements, opinions and data contained in all publications are solely those of the individual author(s) and contributor(s) and not of MDPI and/or the editor(s). MDPI and/or the editor(s) disclaim responsibility for any injury to people or property resulting from any ideas, methods, instructions or products referred to in the content.

© 2025 by the author(s). Distributed under a Creative Commons CC BY license.