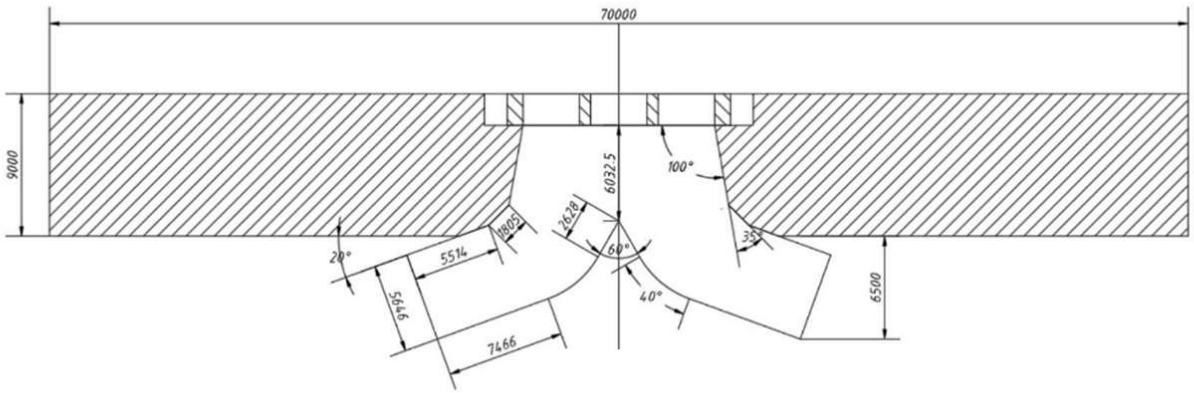

a) Overall dimensions diagram of the rocket deflector

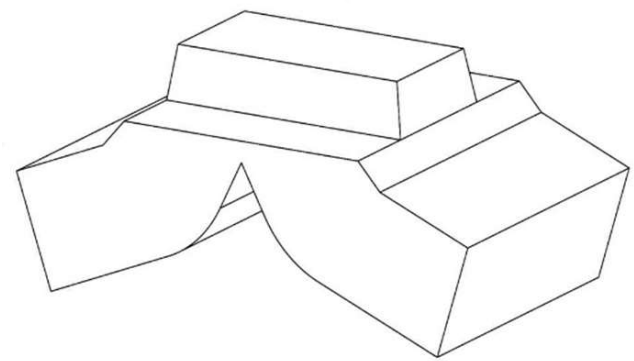

b) Overall profile diagram of the rocket deflector